ALLWEILER – weltweit präsent
ALLWEILER – global presence

Werke in Deutschland
Plants in Germany

ALLWEILER AG
Schraubenspindelpumpen, Kreiselpumpen, Zahnradpumpen, Propellerpumpen und Anlagen
Screw Pumps, Centrifugal Pumps, Gear Pumps, Propeller Pumps and Systems

Postfach 11 40
78301 Radolfzell
Allweilerstraße 1
78315 Radolfzell
Germany
Tel. +49 (0)7732 86-0
Fax +49 (0)7732 86-436
E-mail: service@allweiler.de
Internet: http://www.allweiler.com

ALLWEILER AG
Exzenterschneckenpumpen, Schlauchpumpen, Kreiskolbenpumpen und Mazeratoren
Progressing Cavity Pumps, Peristaltic Pumps, Rotary Lobe Pumps and Macerators

Postfach 20 01 23
46223 Bottrop
Kirchhellener Ring 77–79
46244 Bottrop
Germany
Tel. +49 (0)2045 966-60
Fax +49 (0)2045 966-679
E-mail: service@allweiler.de
Internet: http://www.allweiler.com

The current addresses of ALLWEILER representatives are listed at http://www.allweiler.com.

ALLWEILER AG
Postfach 11 40
78301 Radolfzell • Germany
Tel. +49 (0)7732 86-0
Fax +49 (0)7732 86-436
E-mail: service@allweiler.de
Internet: http://www.allweiler.com

ALLWEILER
A Colfax Business Unit

GB/12.08 – Ident-Nr. 488 079

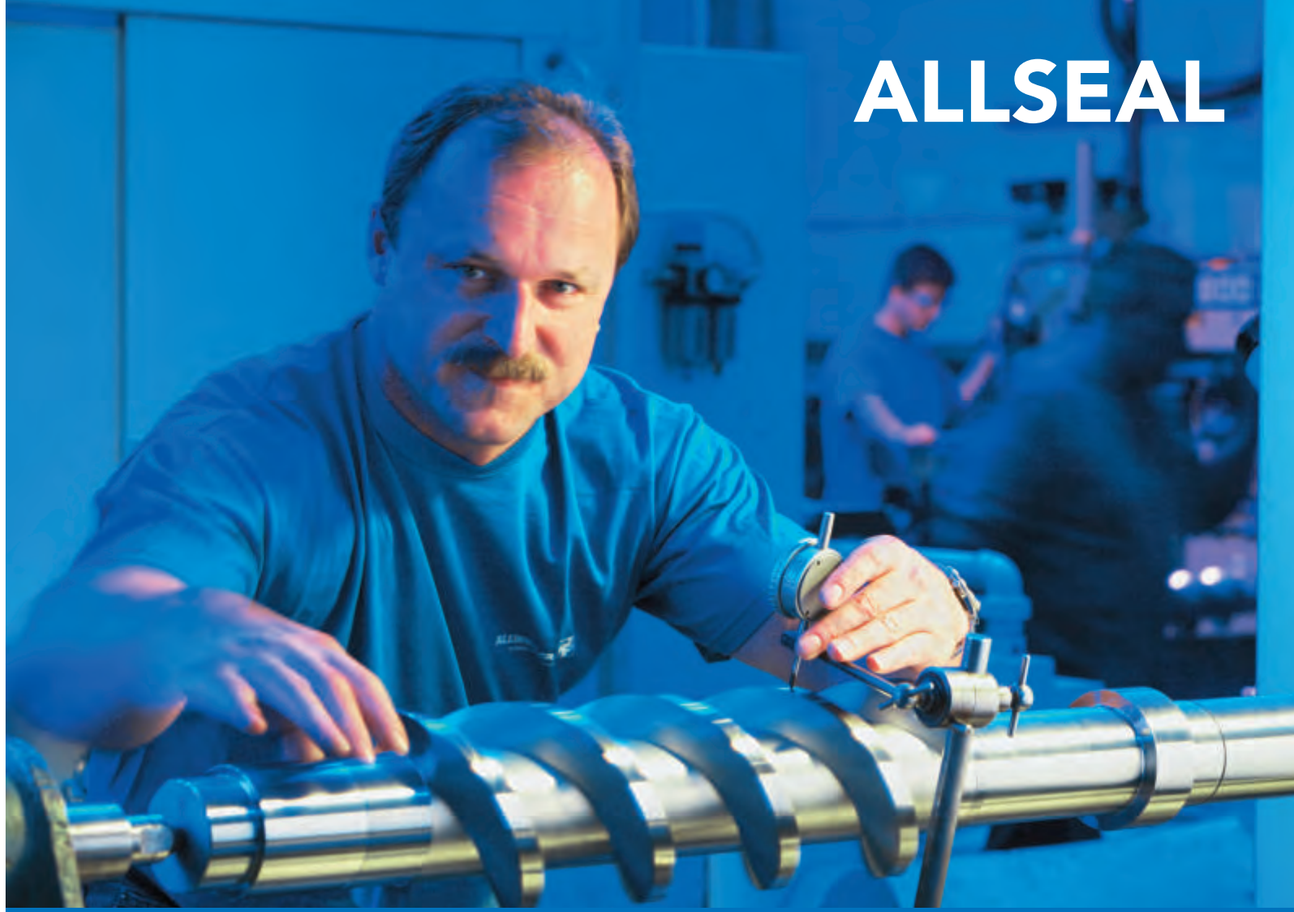

ALLSEAL:
Clean and Secure

For all ALLWEILER vertical screw pumps.
New pumps or retrofit at any time.

- Continuous monitoring of the mechanical seal
- Early detection of unusual leakage
- Compliance with environmental regulations, higher safety, longer pump service life

ALLWEILER
A Colfax Business Unit

ALLSEAL: Detects leakage as soon as it starts

ALLSEAL monitors your pump's mechanical seal. You are immediately informed of any potential problems.

Meets the highest environmental standards: Suitable for ships destined for the United States.

Keeping leakage “normal”:

To operate properly, every mechanical seal requires a lubricating film between the sliding surfaces. This film is formed by the pumped liquid. Elevated pressure inside the suction chamber continuously pushes a small amount of liquid/lubricant out through the sliding surfaces. This "standard leakage" of a few cm^3/h is essential for maintaining lubrication of the sliding surfaces, since absence or inadequate formation of a lubricating film will lead to damages.
(Source: European Sealing Association)

ALLSEAL precisely monitors the amount of this "standard leakage".

Reliable monitoring of the mechanical seal (leakage)

The coupling bracket captures the standard leakage coming out of the pump. A nonwearing opto-electronic sensor - ALLSEAL - is located in the bracket wall. It consists of an infrared LED and an optical receiver. Light from the LED is directed from inside to the sensor's prism tip and is reflected from there to the receiver. If the standard leakage in the coupling bracket reaches the selected maximum, it will enclose the prism tip. The liquid from the leakage will interrupt the light, preventing it from reaching the receiver at all or at its normal strength.

ALLSEAL reacts to this change immediately with appropriate action.

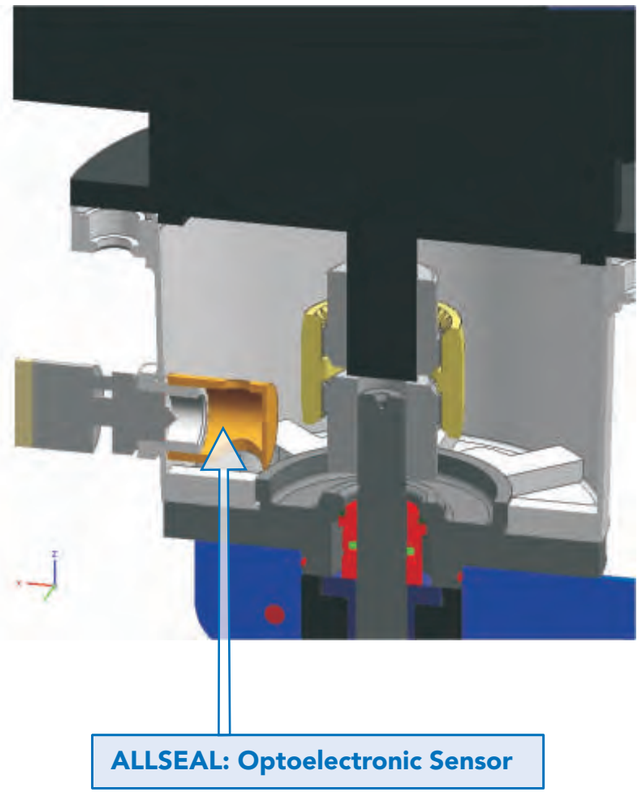

Lower Total Cost of Ownership (TCO)

ALLSEAL will save your money. The optoelectronic sensor serves as a maintenance indicator that monitors the condition of your pump. You can effectively avoid serious pump failures by combining ALLSEAL with an emergency stop controller.

ALLSEAL: The best environmentally compatible solution for your pump

Overview of your benefits:

- ▶No environmental contamination
- ▶Collection of flammable and explosive liquids complies with SOLAS regulations
- ▶Very high operational safety, no uncontrolled escape of liquid
- ▶Modern optoelectronic monitoring system
- ▶No unmonitored leakage
- ▶Monitoring of the mechanical seal extends the pump service life
- ▶Available with new units or as a simple retrofit
- ▶For all viscosities
- ▶Universally compatible with all vertically installed ALLWEILER screw pumps

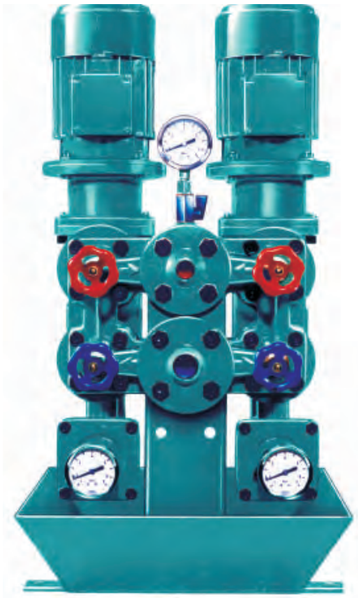

ZASV series with ALLSEAL

ALLSEAL technical data:

- ▶Liquid temperature up to 170 °C
- ▶High reliability
- ▶Accurate to +/- 0.5 mm
- ▶For all viscosities
- ▶Small and compact

Retrofit kit contains sensor, bracket with hole, pump cover with O-ring and new mechanical seal.

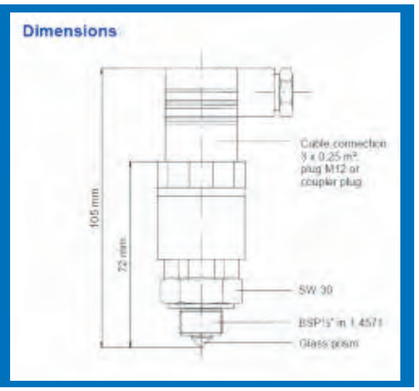

SECURE